UNDERGROUND CABLE FAULT DETECTION USING ARDUINO

[1]Hari Prasad P,[2]Muni Raja T,[3]Dr.Ashok Kumar Reddy R,[4]Dr.Seshappa D
[1]Assistant Professor,[2]Associate Professor,[3,4]Professor
Department of ECE
Tadipatri Engineering College,Tadipatri,AP

ABSTRACT:

Right here in this project we have a tendency to endorse a fault place detector model for the underground cord with Arduino. The goal of the project is to locate the break from the base station underground wire fault in KM's. Throughout this challenge we have a tendency to apply a easy idea of ohm's law. As soon as a fault occurs within the system the space located on liquid crystal display.

Cables have been designed to be positioned above the head and, at existing, there's no underground cable this is above the previous technique. Hard conditions like storm, rains, and pollutants does no longer effect underground traces however once fault takes place in underground it's hard to locate the fault . Here we'll discover the suitable region of the fault. Presently the world has end up digitized as a consequence, the undertaking is to locate unique location of the fault in virtual form.

Underground cabling machine is a a variety of commonly utilized in urban regions. Even though the fault occurs for a few reasons, at that point, the repair technique for this cable is difficult because of no longer understanding the precise place of the cable breakdown. Appropriately carrying a face cowl, and the related entryway may be opened. Packages uploaded to Arduino to notice the faults from cables. Once a break takes place in underground wires, we can ascertain faults via Arduino. LCD show suggests the faults in kilometre. Right here we have a tendency to create faults.

Cable are different sorts. Every cable has completely one of a kind resistance that relies upon the material used. The worth of the resistance depends on the extent of the cable. Right here the resistance is the main role of the mission. If any deviation happens in the resistance, the value of the voltage needs to be modified that individual cause is called as Fault. we are able to discover those faults.

DOI Number: 10.48047/nq.2022.20.9.nq44867 **NeuroQuantology 2022;20(9):7423-7428**

I.INTRODUCTION

Underground cables are being utilized for the advancement of intensity framework matrix. These underground cables are not affected by any climate conditions like rainfall, day off, factors and so forth. An issue may happen in an underground cable just because of earth tremors or any burrowing procedure. Since the area of the issue happened is obscure it is very hard for the fixing procedure. This hindrance is handled with the assistance of optical fibre framework. A lot of optical strands is put alongside the force cables. The optical fibre framework continually quantifies different parameters, (for example, power, current and

temperature of the cable) at numerous checkpoints situated at customary interims on the force cable. When an issue happens the estimations of the parameters of the encompassing territories change unusually. The

information is acquired from the environmental factors of the checkpoints from where the shortcoming is happened. Utilizing this strategy, the inexact separation of the cable shortcoming is found. When the area has been recognized we start to transmit high voltage over the broken cable to locate the specific area of the issue.

II. LITERATURE SURVEY

A broad deficiency area model for underground force cable in conveyance framework utilizing voltage and current estimations at the sending-end has just been proposed by Yang, Xia, in a paper distributed in November 2008. The paper presents an investigation of a proportional circuit that models a blamed underground cable framework utilizing circulated parameter approach. Investigation of succession organizes in three-stage arrange by applying the limit conditions is additionally introduced. Utilizing the examination, System consist of laser transmitter and receiver. And the laser transmit a burst of electromagnetic radiation and when this radiation reflect by the barrier then this reflect light transmitted by Zig Bee communication module to the controller In this case the driver able to take decission to avoid the accidence as much as possible.

Westrom distributed in February 1997, clarifies how infusing a progression of tweeted beat streams into the blamed cable, soon after the event of the cable flaw utilizing a heartbeat generator unit can be utilized for an exact count of the area of the cable deficiency. It has been named as 'shortcoming separation locator'.

Zhao, W in August 2000, proposed a superior way to deal with cable flaw area framework, basically comprising of synchronized testing method, wavelet investigation and voyaging wave standard. Alongside the prologue to three significant methods and a blueprint of the new plan, this paper presents a definite wavelet examination of broken transient waveforms and consequently decides the best wavelet levels for this specific application.

Gilany et.al distributed in January 2007, introduced a wavelet-based issue area conspire for matured cable frameworks when synchronized advanced deficiency recorded information are accessible at the two terminals of the cable. The wavelet peculiarity identification hypothesis is utilized as an amazing sign handling device to appraise the area of the issue in multiend-matured cable frameworks.

Schulze, Member, IEEE et.al Peter Schegner, "Two Terminal Fault Location on Unsymmetrical Transmission Lines",IEEE,2010 , introduced the blackout of a line because of an issue can be costly, subsequently the issue must be cleared as quick as could be expected under the circumstances. Computerized security transfers comprise of shortcoming locators dependent on a few strategies

Xu Sun, Wing Kin Lee1, Yunhe Hou1, et al, Philip W. T. Pong1" Underground Power Cable Detection and Inspection Technology Based on Magnetic Field Sensing at Ground Surface Level ",IEEE ,2014 introduced that IOT based underground cable line shortcoming discovery framework being useful to discover flaws and its area in simple way .Underground cables have been broadly utilized with the advancement of intensity framework lattice.

III.DESIGN OF HARDWARE

This chapter briefly explains about the Hardware. It discuss the circuit diagram of each module in detail.

ARDUINO UNO

The Arduino Uno is a microcontroller board based on the ATmega328 (datasheet). It has 14 digital input/output pins (of which 6 can be used as PWM outputs), 6 analog inputs, a 16 MHz ceramic resonator, a USB connection, a power jack, an ICSP header, and a reset button. It contains everything needed to support the microcontroller; simply connect it to a computer with a USB cable or power it with a AC-to-DC adapter or battery to get started.

The Uno differs from all preceding boards in that it does not use the FTDI USB-to-serial driver chip. Instead, it features the Atmega16U2

(Atmega8U2 up to version R2) programmed as a USB-to-serial converter. Uno board has a resistor pulling the 8U2 HWB line to ground, making it easier to put into DFU mode. Arduino board has the following new features:

- 1.0 pin out: added SDA and SCL pins that are near to the AREF pin and two other new pins placed near to the RESET pin, the IOREF that allow the shields to adapt to the voltage provided from the board. In future, shields will be compatible both with the board that use the AVR, which operate with 5V and with the Arduino Due that operate with 3.3V. The second one is a not connected pin, that is reserved for future purposes.
- Stronger RESET circuit.
- Atmega 16U2 replace the 8U2.

"Uno" means one in Italian and is named to mark the upcoming release of Arduino 1.0. The Uno and version 1.0 will be the reference versions of Arduino, moving forward. The Uno is the latest in a series of USB Arduino boards, and the reference model for the Arduino platform; for a comparison with previous versions, see the index of Arduino boards.



Fig: ARDUINO UNO

POWER SUPPLY:

The power supplies are designed to convert high voltage AC mains electricity to a suitable low voltage supply for electronic circuits and other devices. A power supply can by broken down into a series of blocks, each of which performs a particular function. A d.c power supply which maintains the output voltage constant irrespective of a.c mains fluctuations or load variations is known as "Regulated D.C Power Supply".

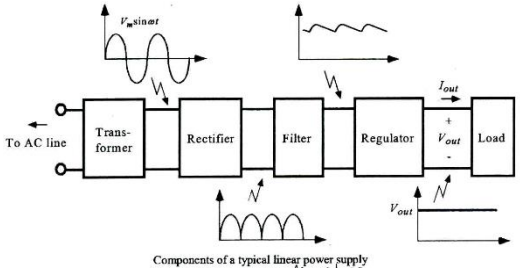

Fig: Block Diagram of Power Supply

LCD DISPLAY

A model described here is for its low price and great possibilities most frequently used in practice. It is based on the HD44780 microcontroller (Hitachi) and can display messages in two lines with 16 characters each. It displays all the alphabets, Greek letters, punctuation marks, mathematical symbols etc. In addition, it is possible to display symbols that user makes up on its own. Automatic shifting message on display (shift left and right), appearance of the pointer, backlight etc. are considered as useful characteristics.

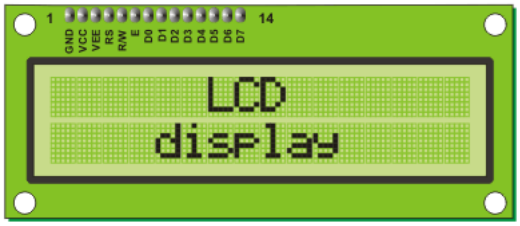

Fig: LCD

BUZZER

Digital systems and microcontroller pins lack sufficient current to drive the circuits like relays, buzzer circuits etc. While these circuits require around 10milli amps to be operated, the microcontroller's pin can provide a maximum of 1-2milli amps current. For this reason, a driver such as a power transistor is placed in between the microcontroller and the buzzer circuit.

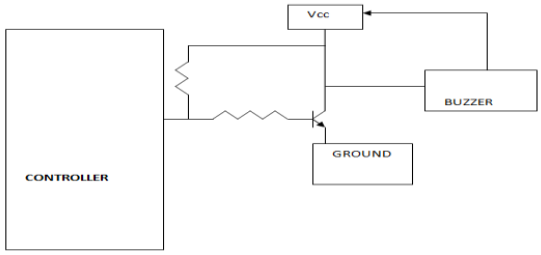

WIFI MODULE:

The **ESP8266** is a low-cost Wi-Fi microchip with full TCP/IP stack and microcontroller capability produced by Shanghai-based Chinese manufacturer, Espressif Systems.[1]The chip first came to the attention of western makers in August 2014 with the **ESP-01** module, made by a third-party manufacturer, Ai-Thinker. This small module allows microcontrollers to connect to a Wi-Fi network and make simple TCP/IP connections using Hayes-style commands. However, at the time there was almost no English-language documentation on the chip and the commands it accepted.[2] The very low price and the fact that there were very few external components on the module which suggested that it could eventually be very inexpensive in volume, attracted many hackers to explore the module, chip, and the software on it, as well as to translate the Chinese documentation.[3]The **ESP8285** is an ESP8266 with 1 MiB of built-in flash, allowing for single-chip devices capable of connecting to Wi-Fi.[4]The successor to these microcontroller chips is the ESP32.

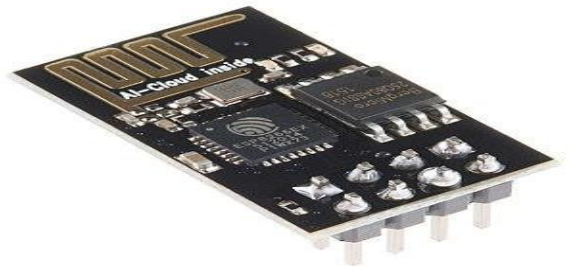

LED:

A light-emitting diode (LED) is a two-lead semiconductor light source. It is a p–n junction diode that emits light when activated.[5] When a suitable voltage is applied to the leads, electrons are able to recombine with electron holes within the device, releasing energy in the form of photons.

This effect is called electroluminescence, and the color of the light (corresponding to the energy of the photon) is determined by the energy band gap of the semiconductor. LEDs are typically small (less than 1 mm^2) and integrated optical components may be used to shape the radiation pattern.



Early LEDs were often used as indicator lamps for electronic devices, replacing small incandescent bulbs. They were soon packaged into numeric readouts in the form of seven-segment displays and were commonly seen in digital clocks. Recent developments have produced LEDs suitable for environmental and task lighting. LEDs have led to new displays and sensors, while their high switching rates are useful in advanced communications technology.

LEDs have many advantages over incandescent light sources, including lower energy consumption, longer lifetime, improved physical robustness, smaller size, and faster switching. Light-emitting diodes are used in applications as diverse as aviation lighting, automotive headlamps, advertising, general lighting, traffic signals, camera flashes, and lighted wallpaper. They are also significantly more energy efficient and, arguably, have fewer environmental concerns linked to their disposal.

RELAY

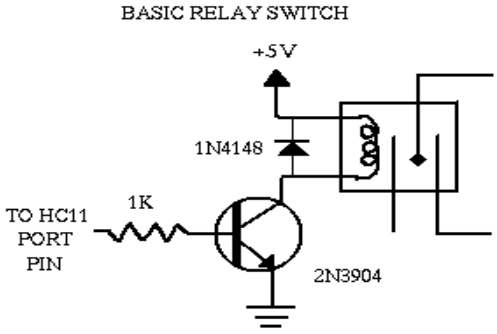

The following schematic shows the basic circuit.

A relay is an electrically operated switch. When you turn it on, it switches on way. When it is off, it switches the other way. You can use a relay to

switch on and off a high current device. A relay has an electromagnet, called a coil, and a lightweight switch inside it. When you energize the coil, a piece of the switch is attracted by the coil's magnetic field, which switches the switch on or off.

Mechanical relay:

Typical Mechanical Relay connection pin This is a very important section. The introduction to this electrical control switch, call a Relay. It is basically a device to activate a mechanical switch, by electrical means. This is unlike a switch which is activated manually. In another words it is a device that convert electrical signal to a mechanical energy back to electrical signal again. Similar to mechanical switch, they can be described as 2P2T, single pole double throw, etc... How it works? A electrical voltage will be applied to activate a coil in the relay. The coil being powered up, will generate a magnetic force that will attract the lever. This lever will be pulled towards the magnetized coil, causing an action that will switch the mechanical contact.

IV. BLOCK DIAGRAM:

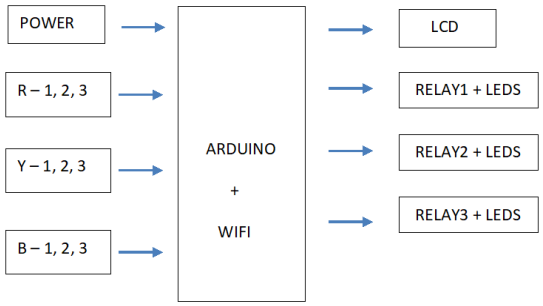

Working: Commonly people have been using business voltage (230V).This voltage is adventure down through development down transformer. Transformer is an electrical device that trades electrical imperativeness between in any event two circuits through electromag neticinduction.. Generally, transformers are usedto addition or decreasing the voltages of trading stream in electric power applications.These adventure down voltage goes to rectifier unit Rectifier is just an electronic contraption which used to change over an AC supply into DC supply. This endeavor we were using length rectifier.12V AC supply is changes over into 12V DC supply. These voltage moves to the controller unit. Controller is an electrical contraption which is used to keep up a reliable voltage. Here we were using two voltage controller. Explicitly voltage controller 7812 and voltage controller 7805.7812 voltage controller keeps up the 12V DC supply. These voltage is adequate to work hand-off unit and 7805 voltage controller keeps up the 5V DC supply. These voltage is used to manage the Arduino unit. We moved the program in the unit. Program was created if any fault occur in the connection, immediately will open the exchange terminal and isolate that messed up line in a manner of speaking. Rest of various lines works normally. By and by a days embedded system changed metorically. Arduino is the pushed variation of embedded structure. These Arduino has adequate sorts yet we picked Arduino UNO. These Arduino UNO serves to develope many impelled variation of Arduino UNO makes straightforward condition .it successfully to get various contraptions using consecutive port. Next we move the hand-off. Move is just an electrical contraption here which went about as a switchif any fault occur in the line, will isolate the line using hand-off. The connector of the exchange moves from commonly close direct to the routinely open conducet .we viably find the fault and to isolate the accuse line. Show unit is partner the Arduino pack which is used to where the fault occurs and to demonstrate to itself. Underground cable fault detector deals with finding of exact fault location from the base station itself. The proposed system finds the exact location of the fault. This paper uses the standard concept of Ohm's law i.e. As soon as a low DC voltage is applied at the feeder end through a series resister, the current would vary depending upon the location of fault in the cable. Cables have some resistance. We are mainly focusing on the resistance. Resistance can vary with respect to the length of the cable. If the length of the cable is increase, the value of the resistance will also increase. If any deviation occurs in the value of resistance, we

will call that is fault point and finding that place through Arduino technology. The standard of distance (kilometre) from the base station is represented by the fault point. This value displayed by display unit LCD. Whenever a fault occurs in a cable the buzzer produces the alarm to alert and to take an immediate action by field workers.

V.CONCLUSION

The project model what we designed is capable of providing the desired results. The model can be successfully implemented as a RTS (Real time system) with certain changes. Science is evolving day by day and creating big breakthrough in different fields, hence for doing or accomplishing same thing we can use different technology and method. Moving ahead, many components can be fabricated on a single along with microcontroller, this makes the system small and therefore making the available system more effective and efficient. Component with high range and accuracy is required to implement for the real time system. A prototype model is developed by us, and the same can be implemented to product level in the future. For any product to be user friendly and durable it must be compact and cost effective. Moving ahead, most of the component can be embedded along with microcontroller on a single board with using different technology which can reduce the size of the system making it compact.

REFERENCES:

1. S. M. Miri, and A. Privette, "A survey of incipient fault detection and location techniques for extruded shielded power cables.
2. W. Charytoniuk, W. Lee, M. Chen, J. Cultrera, and T. Maffetone, "Arcing fault detection in underground distribution networks-feasibility study.
3. N.T Stringer, L. A. Kojovic, "Prevention of underground cable splice failures,"
4. T. T. Newton and L. Kojovic, "Detection of sub-cycle, self-clearing faults,"
5. B. Kasztenny, I. Voloh, C. G. Jones, and G. Baroudi, "Detection of incipient faults in underground medium voltage cables,"
6. B. Qinghai Shi, Troeltzsch U, Kanoun O. Detection and localization of cable faults by time and frequency domain measurements. Conf. Systems and Signals and Devices, 7th International conference, Amman.2010; 1-6.